BEEF CATTLE COMMENTS

VOLUME 18 NUMBER 2, June 2009

Prepared by: Mike Baker, Beef Cattle Extension Specialist, Cornell University

Phone: 607-255-5923
Fax: 607-255-9829
E-mail: mjb28@cornell.edu
Web page: www.ansci.cornell.edu/beef/

1. NEW YORK BEEF PRODUCER'S BULL TEST SALE RESULTS

An unusually warm day greeted all who attended the New York Beef Producer's Bull Test sale on April 25 at the Empire Farm Days site in Seneca Falls. Twenty five bulls that had successfully completed the test as well as indexed in the top 95% were offered for sale. In the end 18 buyers from New York, New Jersey and Vermont spent $40,500 and took home 20 bulls.

Results of New York Beef Producers Bull Test Sale, April 25, 2009

Breed	Number	$/head
Angus	9	$2,050
Red Angus	5	$2,175
Simmental	6	$1,800
All	20	$2,025

The top selling bull was a Red Angus Perks Chateau 309R son consigned by Shepard Settlement Farm in Marcellus, NY and purchased by Erwindale Farms in Waterloo for $2800. The top selling Angus bull was a GAR Retail Product son consigned by Big Stoney Farms in Greene, NY and was purchased by Keith Burtt in Cabot, VT for $2650. Kenneth Hill of Renesselear Falls, NY purchased the top selling Simmental bull, GFI Magnum K52 son, consigned by Ladybug Farm in Middleport, NY for $2200.

For more information on the New York Bull Testing Program, contact Megan Galloway, NY Beef Producer's Association, (607) 965-8282, nybpa2@aol.com.

2. EMPIRE HEIFER DEVELOPMENT PROGRAM OPEN HEIFER SALE.

Owner	EHDP ID	Sale Price	Buyer
Hereford			
Wagner	1124	$950	James Wade, Skaneateles,NY
Wagner	1126	$1,000	James Wade, Skaneateles,NY
Angus			
Moore	1114	$900	Mike Baker, Livonia, NY
Moore	1115	$1,025	Keith Burtt, Cabot, VT
Moore	1116	$1,000	David Powers, Moravia, NY
Moore	1117	$1,200	Steven Crandall, Cuyler, NY
Moore	1119	$1,100	Andrew Juby, Adams Center, NY
Moore	1120	$1,050	Keith Burtt, Cabot, VT
Moore	1122	$1,250	Steven Crandall, Cuyler, NY
Average-all		**$1053**	

Nine registered Hereford and Angus heifers were sold at auction on April 25, following the NY Beef Producer's Bull Test Sale in Seneca Falls. The heifers were part of the Empire Heifer Development Program (EHDP) designed to grow, develop and

evaluate beef heifer calves following the weaning period. The EHDP was held at Erwindale Farms, Waterloo. Ron Parker, Finger Lakes Livestock Exchange called the sale.

For more information on the EHDP, contact Mike Baker, Cornell University Beef Extension Specialist, mjb28@cornell.edu, 607255-5923.

3. NEW YORK FEEDLOT AND CARCASS VALUE DISCOVERY PROGRAM-CATTLE MARKETED

As of April 16, more than half of the cattle have been marketed through the New York Feedlot and Carcass Value Discovery Program. The performance of these cattle is shown in the table below.

New York Feedlot and Carcass Value Discovery Program, 2008/2009 – Cattle Marketed report

	Steers		Heifers	
Item	Conventional	Natural[1]	Conventional	Natural[1]
N	65	9	23	14
Initial wt, lb	723	547	701	823
Final wt, lb	1232	1064	1112	1212
Average daily gain, lb	3.8	3.5	3.5	2.7
Days on feed	133	147	119	143
≥ USDA low Choice	96	56	95	100
USDA Yield grade	2.7	3.0	2.8	3.3
Hot carcass wt, lb	759	652	675	750
Backfat, in.	0.51	0.50	0.50	0.61
Ribeye area, in^2	12.7	11.3	12.3	12.5

[1]Cattle in the natural program are not fed an ionophore nor treated with growth promoting implants.

Only one group of Natural cattle has been marketed, so the numbers are too low to make valid comparisons, but some interesting trends are taking shape. As we have seen in the past the Natural cattle have a smaller ADG are on feed longer. The Natural steers have smaller finish weights and hot carcass weights, but just the opposite is true for the heifers. Research results generally show an increase in ribeye area in implanted cattle, and this was seen in the steers, but not in the heifers. The increased performance seen in the Conventional steers but not the Conventional heifers is due to the difference in frame size of the heifers. The Natural heifers are larger frame than the Conventional heifers that have been marketed so far.

The remainder of the cattle should be marketed by the end of May. If you have any questions or would like to view the cattle, contact Mike Baker, 607-255-5923, mjb28@cornell.edu.

4. PASTURE BLOAT

- The bloat-causing potential is related to the rate of digestion by rumen microbes. The fine portions of bloat-causing forages are digested rapidly whereas bloat-safe forages are digested slower.

- The greatest factor causing legume bloat relates to the percentage of fines relative to coarse material in the rumen at any point in time. Grazing management that forces the animals to consume the entire plant within a short time encourages the mixing of fines with coarse plant material. This is done by grazing at a high stock density and frequent moves.

- Stage of growth or crop maturity is the most important factor in preventing pasture bloat because animals eat coarser material as the crop matures.

- Alfalfa is known to being bloat-safe after a killing frost. However, as long as the alfalfa is alive, there is a risk of bloat.

- Animal susceptibility to bloat is related to the clearance of small feed particles from the rumen. Cattle that frequently bloat have a slower clearance of these small feed particles than non bloaters. This has been demonstrated in both feedlots and pastures.

- Uniform and regular intake is the key to managing animals on legume pastures. Storms and biting flies can interrupt normal grazing behavior increasing the risk of bloat.

- Bloat is less likely to occur if animals are turned out to pasture in the afternoon than in the morning because plant cells are less turgid in the afternoon resulting in slower rupturing of the cells during digestion.

- Swathing and wilting pastures is another strategy for reducing bloat. Wilting a swath for 24 to 48 hours can significantly reduce the incidence of bloat from 81 per cent to 50 per cent.

- Poloxalene (Bloat Guard™) is a synthetic polymer which reduces surface tension and has been used quite successfully to decrease the incidence of bloat on pasture.

Forage species and their potential for causing bloat in cattle

High Potential	**Low Potential**	**Considered Safe**
Alfalfa	Arrowleaf clover	Birdsfoot trefoil
Sweetclover	Spring wheat	Cicer milkvetch
Red clover	Oats	Crownvetch
White clover	Rape	Lespedeza
Alsike clover	Perennial ryegrass	Fall rye
Winter wheat		Most grasses

Preventing Bloat on Pasture

1. Manage pasture for no more than 50% legumes. (This has little value if selective grazing is possible)
2. Fill cattle on dry roughage or grass pasture before turning out on a legume pasture.
3. Do not initially turn cattle on pasture wet with dew or rain.
4. Once cattle are turned to pasture, don't remove at the first signs of bloat. Watch them closely and remove only those whose condition continues to worsen if it is a small percentage of the total number.
5. If green chop is being fed, spread the intake over several feedings while the cattle adapt to the new feed.
6. Poloxalene (Bloat Guard™) is a synthetic polymer which reduces surface tension and has been used quite successfully to decrease the incidence of bloat on pasture.

Adapted from http://www1.foragebeef.ca/$foragebeef/frgebeef.nsf/all/ccf126 and Stephen Boyles OSU Extension Beef Specialist.

5. SELECTING CATTLE FOR EASY CALVING AND GREATER YEARLING WEIGHT

Researchers at the USDA Meat Animal Research Center in Nebraska selected two lines of cattle. The SELECT line objective was to decrease calving difficulty score in 2-yr-old heifers, while either maintaining or increasing yearling weight. The CONTROL line objective was to maintain calving difficulty score and maintain or increase yearling weight. SELECT and CONTROL lines were formed in 4 purebred and 3 composite populations over a 7 year period.

Observations were made on 2-yr-old calving difficulty scores, birth weight, weaning weight, and postweaning gain. Calving difficulty was scored on a scale from 1 (unassisted) to 7 (caesarean). All birth traits in SELECT lines were favorable compared to the CONTROL lines.

Averaged over 7 yr, compared to CONTROL the SELECT lines:

- calved 3.0 days earlier
- had 1.8 day shorter gestations
- were 6.6 lb lighter at birth
- had 5.6% fewer calves assisted at birth
- had 0.80 lower calving difficulty score in 2 year old heifers
- increased preweaning ADG 1.7%
- had the same weaning and yearling weights

The authors concluded that selection can be used effectively to reduce 2-yr-old calving difficulty and calving assistance while maintaining or increasing yearling weight.

(Source: Bennett et al., J. Anim Sci. 2008. 86:2103)

6. PREVENT HAY FIRES ON YOUR FARM

Brian Aldrich, Ag. Educator, Cornell University Cooperative Extension Cayuga County

Risk of Fires Caused by Wet Hay

To prevent fires in the haymow, it is extremely important to know the weather conditions under which the hay was made, especially if it is hay you are purchasing and did not make yourself! Stacking small, rectangular bales at 20% moisture or higher, and large or round bales at 16% moisture or more, potentially creates the conditions for a fire. Fires in freshly cut hay usually occur within the first two to six weeks after baling.

How to Tell if You Have a Problem

Some heating in new hay is normal. The quickest way to tell if you have a problem is to drive a long pipe (8-10 ft., 3/8-inch diameter) or an iron or copper rod into the center of the stack. Leave it in for 20 minutes and then pull it out. If it's too hot to hold in your hand, the hot hay should be removed immediately.[1] Another warning sign is that smoldering hay gives off a strong, pungent odor.

If you suspect you have a problem for any reason, monitor the temperature of the haystack. A temperature of **150°F** or higher means that hay is entering the danger zone. The following table provides guidance for actions to take depending on the temperature of the hay. I have put this table together using several published references, and chosen the most conservative values where there were differences.

Temperature	Action Steps
120°F or below	No concern, no action needed.
120 to 140°F	Check temperature daily.
140 to 150°F	Check temperature twice a day.
150°F	Entering the danger zone! Check temperature every two hours.
150 to 160°F	Begin moving hay out of the structure. At a minimum, stacked hay should be disassembled to allow more air to move around heated bales to cool them.
160 to 175°F	Call fire department, have them on-site before moving hay.
175°F	The danger of spontaneous combustion is rapidly increasing. Hot spots or fire pockets are likely. If possible, stop all air movement around hay. Call 911 to alert of a possible hay fire.
185°F	Remove hot hay. This should be done with the assistance of the fire service. Fire service should be prepared for hay to burst into flame when it contacts fresh air. Move hay away from buildings with bucket-loader or bulldozer.
200°F or higher	Hay is almost sure to ignite. Remove hot hay. This should be done with the assistance of the fire service. Fire service should be

	prepared for hay to burst into flame when it contacts fresh air. Move hay away from buildings with bucket-loader or bulldozer.

How to Check the Temperature of a Haymow

Commercial hay thermometers are too short to monitor the interior temperature of a haymow. The National Ag. Safety Database (www.cdc.gov.nasd), "**Hay Fire Prevention and Control**", offers the following instructions on how to fabricate and use a longer probe to measure temperatures deeper inside the haystack:

A simple temperature probe can be made in the farm shop from a 10-foot piece of 3/4-inch diameter iron pipe. Drill eight 3/16-inch diameter holes about three inches from one end then hammer that end of the pipe together to form a sharp edge (Figure 1). Check hay temperature in the center of the stacked hay. The easiest way to do this is from the top of the stack. Do not walk directly on the stacked hay; pockets may have already burned out under the hay surface. Place boards, plywood, or a ladder on the hay and walk on those instead (Figure 2). This will spread the weight of the person monitoring the temperature over a larger area and help keep him from falling into burned out cavities. Be sure to use a lifeline in case the hay surface collapses into a fire pocket. A second person, standing safely away from the hay, should hold the other end of the rope to pull the person monitoring the temperature out in case the hay surface collapses into a fire pocket. Drive the probe from the top of the hay stack into the inner most bales (Figure 3). Lower a thermometer to the end of the probe with a piece of light wire. After 10 to 15 minutes, retrieve the thermometer and read the temperature.

Figure 1. Homemade hay temperature probe with thermometer.

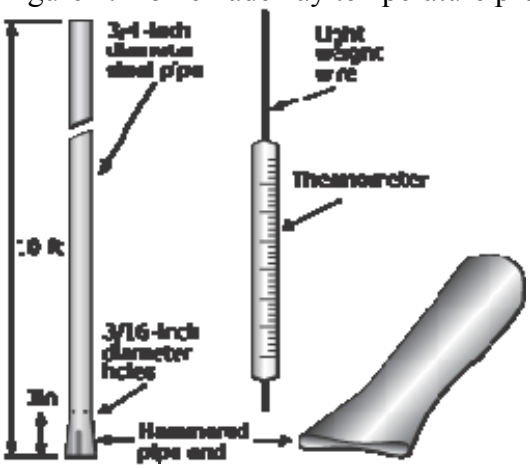

Figure 2. Proper procedure for monitoring hay temperatures

Figure 3. Proper location for inserting temperature probe.

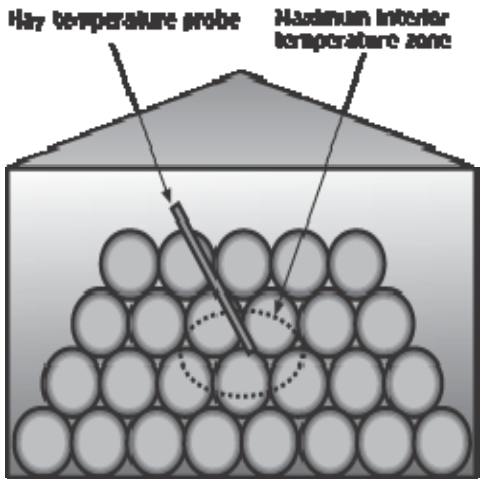

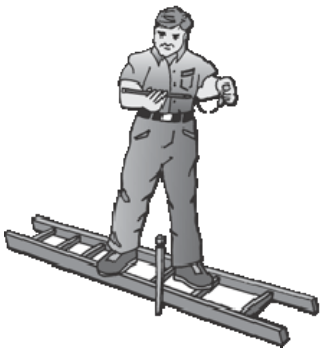

Role of Ventilation Depends on Hay Temperature
At lower temperatures, ventilation helps to disperse the heating that normally occurs in stored hay. But at temperatures of 175°F or greater, ventilation will fuel a fire and should be avoided.

If Hay Starts On Fire
Call 911 immediately if a fire starts in your haymow. Do not wait to see if you can put the fire out yourself. Hay fires can spread very rapidly and soon become uncontrollable. The National Ag Safety Database advises, *"Let firefighters take control of the situation once they arrive. Do not move hay if signs of fire are present. Moving hay exposes the overheated or smoldering hay to oxygen and may cause the fire to burn uncontrollably."*

For further information, please call your local Cornell University Cooperative Extension office.

Sources: 1. Hall, Marvin. 2006. Penn State Field Crop News Vol.06:04. *http://fcn.agronomy.psu.edu/2006/fcn0604.cfm*
2. Murphy, Dennis J., and William C. Arble. 2000 (revised). Extinguishing Fires in Silos and Hay Mows. NRAES-18. Natural Resource, Agriculture, and Engineering Service, Ithaca, NY. Table 6-1, p.27. *www.nraes.org*

7. DEVELOPING BEEF PRICING

By Sarah Aubrey

Modern wisdom tells us that it's the strategies, as much as the quality of product that will allows us to survive with a small beef operation. One important strategy is pricing products. Establishing any good's value is in some measure done in relation to its price. Your customers will no doubt love the beef you provide them, but even the most loyal or affluent customers will decide what to purchase, how much, and how often partly based on the cost of goods you're peddling. Your job as a product seller is to understand your market.

Fitting the Standard

Of course we're aware that commodity prices drive the beef market. But, it's not necessarily the same for branded beef products, especially at the local level. You may not need to fit the standard and it may even be a great selling point for your company if you don't.

For example-pricing below a certain standard (if you can afford to) may draw your target market to you better than being the same as other vendors. Likewise, if you're intent on delivering a high-end premium product, pricing above the typical point will be a must, assuming your quality and uniqueness merit the difference.

Pricing Rational

Deciding how you arrive at price is called the pricing rational. Your pricing rational can be based upon:

· Wholesale verses retail pricing (or both if you will sell both ways)
· Comparable products in your market
· Target clientele (value priced products or premium-level)
· Commodity or local markets
· Breakeven analysis
· Wholesale verses retail

The first factor to use in determining price is to decide how your product will be sold. One way to sell a product is at wholesale which means the product will be made by you and then sold to an intermediary such as a distributor or even a restaurant or store that will mark the final product up and make their cut before the end result is sold to the consumer.

The other way to sell is retail which means that you are the intermediary or that no intermediary exists and that you produce the product then sell it directly to the end consumer at the end price.

It would be easy to say that the decision between wholesaling and retailing is simply a decision of how much money you want to make and how much of the customer's final dollar you want to earn.

Said another way, someone once told me that selling retail is the way you can afford to sell wholesale off the farm! Jokes aside, I personally think that's an overstatement. The choice between these two is complicated and involves a number of factors, including the amount of dollars you want to retain for yourself in the final product you deliver. Selling retail may offer you the retail price (easily 50-70 percent more than wholesale) but it will cost you something in terms of time, labor, and other features such as packaging, labeling, processing fees and even increased liability. Your home farm situation and your market niches will ultimately determine this decision for you, but I recommend building a comprehensive pro/con list as you work through the decision.

Researching Existing Prices

The next strategy for pricing is to research existing prices and determine yet another layer of your pricing strategy. Some general ideas on researching price include: Look into commodity markets within your industry especially if you'll be selling wholesale. Commodity markets can be found with the USDA agricultural statistics service and other agencies

Search the Internet for other brands out there that market what you do. What do they charge? Do you think their pricing is effective?

Sign up for daily, weekly or monthly web feeds for organizations that regulate or associations that represent beef producers.

Shop the stores and markets that you plan to sell at as you did during your early market research to learn prices, features and benefits that will help distinguish your own brand.

Finally, as you set prices and begin selling, test new product prices on your customers and conduct pricing research as you work with your end consumers.

About the Author: Sarah Aubrey is the owner of Aubrey's Natural Meats, Indiana's premier source for gourmet natural beef and pork. She and her husband live in rural Indiana, where they raise beef cattle for her company.

To help farmers position themselves well for the opportunities afforded by today's market, Aubrey shares her years of experience in her first book Starting & Running Your Own Small Farm Business due out in January 2008. It offers everything readers need to know about launching a small agricultural enterprise, from initial start-up to consumer marketing. It is the first in a series of books Aubrey has planned for small farm businesses. For more information visit http://storey.workman.com/products/9781580176972/.

8. FEEDER'S CORNER

a) Wild Cattle - Is it in their eyes?

Sarah Core, a masters student from the University of Guelph recently reported on a study evaluating use of the amount of white in cattle eyes as a measure of temperament.

Temperamental cattle are both dangerous and frustrating to handle. Animals who constantly try to leap over gates or charge towards openings are a danger to themselves, other animals and to their handlers. Injuries caused by this type of behavior affect the price of a carcass due to increased trimming of bruised areas. Temperamental cattle also have decreased gains in the feedlot as well as poorer meat quality. All of these factors contribute to lower profits for the producer.

Current Research on Evaluating Temperament. Recently, innovative research at the University of Guelph has shown that the percentage of revealed eye white can be used as a predictor of temperament. Eye white evaluations were conducted at the Elora Beef Research Station on bulls, steers and heifers as a graduate research project. This method was promising as it is an easy, inexpensive technique that can be consistently evaluated by a physical measurement rather than behavioral scoring. A digital camera was set up near the squeeze chute so that it captured the animal's eye. Video recording then took place while the animals were run through the chute. Images were then stored and analyzed to assess the amount of eye white revealed by each animal.

Flight speed was measured and chute score evaluations were also conducted. The results of these analyses showed that percentage of eye white had a significant positive correlation with both temperament scoring and flight speed.

The difference in per cent eye white between docile and temperamental animals within the study can be observed in images 1 and 2. This type of measure can be repeated on the same animal with a precision of 80 per cent. An additional benefit of this method is that it provides digital image records that can be used or re-analyzed at a later date. Since this measurement is reliable and highly correlated with temperament, percent eye white is a good tool for identifying animals that should be implemented in intensive selection programs for temperament.

Figure 1. Large amount of eye white

Figure 2. Smaller amount of eye white

Implications. The study of temperament and its effects on productivity is a booming area of research, but so far the results are not widely used in breeding and selection programs. With increasing consumer demands for higher quality products and better management of livestock, selection for docility in cattle and other behavioral traits will play a key role in increasing profit margins throughout the beef industry. As technology improves, and better methods of assessment are developed, temperament will become an important part of future selection decisions.

b) Excede® Given to Calves on Feedlot Arrival Reduced Respiratory Disease and Improved Performance

Univ. of Nebraska researchers conducted a clinical trial in which 842 steer calves were assigned to either one of two treatments on arrival at the feedlot: 1) Control; or 2) Injection on arrival with the long-acting antibiotic, Excede® (ceftiofur crystalline free acid, Pfizer Animal Health). Data were collected during the first 32 days of the feedlot receiving period. Following is a summary of animal performance.

	Treatment	
Item	**Control**	**Excede**
Initial weight, lb	614	610
Final weight, lb	686	687
Avg. daily gain, lb	2.20	2.37
Dry matter intake, lb/day	13.7	14.0
Feed/gain, lb	6.21	5.88
Incidence of BRD, %	12.5	4.4

As shown in the table, avg. daily gain was 8% greater for Excede cattle than for Controls

(P=0.02), and feed/gain was numerically improved (P=0.07) for the steers receiving Excede. Incidence of bovine respiratory disease (BRD) was substantially reduced in steers that received Excede (4.4 vs. 12.5%). The authors concluded that treatment with Excede on arrival in the feedlot reduced the incidence of BRD by 64%, and also improved avg. daily gain 8% during the receiving period compared to no treatment (Benton et al. 2008. Univ. of Nebraska Beef Cattle Report).

9. BQA UPDATE: The Temperature Variability of Refrigerators Storing Animal Health Products

Data loggers were used to record temperatures at 10-min intervals for 48 h in 191 refrigerators of producers, retail stores, and veterinary clinics. Refrigerator types included freezer-on-top, side-by-sides, and mini-refrigerators. The refrigerator ranged in age from less than 5 years to more than 15 years. Refrigerator locations included miscellaneous places, kitchens, barns, mud rooms, and tack rooms. Of the 1,800 animal health products in refrigerators of producers, 11.8% were expired and 29.3% were opened. The overall temperature was 38 ± 39°F. In conclusion, only 26.7% of the refrigerators kept the temperature within the acceptable range. No refrigerator type, location, or age was superior. Refrigerators storing animal health products should be carefully monitored, and expired and opened products should be disposed of properly.

(Source: *Troxel et al., Professional Animal Scientist April 2009 vol. 25 no. 2 202-206)*

BQA is a voluntary program focused on increasing the quality, taste and safety of beef. Certification demonstrates your commitment to the principles of BQA. To find out how you can participate, contact Mike Baker, Cornell Beef Extension Specialist, 607-255-5923, mjb28@cornell.edu or Carol Gillis, NY Beef Industry Council Executive Director, 800-292-6922, cgillis@nybeef.org.

10. SURVEY OF PASTURE-FINISHED BEEF PRODUCERS IN THE NORTHEASTERN UNITED STATES

Twenty-six pasture-finished beef producers were surveyed with locations in Pennsylvania, New York, and Maryland. Surveys were personal interviews, and most were done on the farm site. The surveys were conducted to examine production and marketing economics and to determine productivity and profitability. The farms varied in size from 10 to 200 acres for pasture-finished cattle. Production ranged from 2 grazing animals intended for harvest to 75 cattle harvested. Most producers reported that cattle sales represented 10 to 25% of the total farm and nonfarm income. Cattle predominantly grazed grass-legume combinations on 23 of 26 farms. The predominant breed was Angus (29% of farms). Most producers were not using vaccines, and mean health cost per animal was $11.22, primarily from de-wormers. The mean age of cattle at harvest was 20.7, with a minimum of 14 mo and a maximum of 27 mo, and a mean final BW of 1098 lb.. Fifty-five percent of the product was sold as frozen retail cuts at an average price of $4.95/lb. Average cost per steer was $2,066.32, and net returns were -$198.62 per steer, with considerable variation (±$1,596.90). Correlations of net returns, net returns to land

and labor, and gross income with equipment cost, purchased feed cost, land cost, and cost per steer indicated that land, equipment, and wintering costs had the greatest influence on net returns.

Source: *Steinberg et al., Professional Animal Scientist February 2009 vol. 25 no. 1 104-108*

11. TO/DO MAY/JUNE

a) Vaccinating cows for IBR, BVD, BRSV, PI_3, and Leptospirosis is an important part of an effective herd health program. Consult with your veterinarian about using modified live vaccines on open cows prior to breeding your cowherd.
b) Get ready for breeding season:
   - If you use A.I. order semen and check your equipment. Be sure breeding corral is in working order
   - If breeding naturally, make sure you have enough bulls: 10-15 cows per yearling bull; 20-25 cows per 2-year old bull; 30-35 cows per mature bull.
   - Have phosphorous source in form of free-choice mineral mix; phosphorous is important for maximum fertility.
   - Yearling British heifers should weigh a minimum of 700 lbs. and continental heifers a minimum of 750 lbs. before being bred.
   - If lactating cows are thin and not cycling, feed more energy.
   - Vaccinate open cows for IBR, BVD, PI_3, BRSV, and Leptospirosis. Consult your veterinarian for additional health information.
c) Breed heifers one heat period before the cows. This provides extra time for heifers to recover to calve with the cowherd the following year
d) Take advantage of early summer grass. Turn cows in when grass is 4-6 inches tall, graze intensely for 7 days and then rotate to another field. Pasture should be rested 25-40 days before grazing again.
e) Is hay making equipment ready? For highest quality, first cutting should be started by end of May to early June, depending on species and location.
f) After first cutting or grazing, consider fertilizing with nitrogen to maximize aftermath growth.
g) If you vaccinate for pinkeye, do so six weeks prior to fly season. In other words, it may be <u>too late</u> to get effective pinkeye control through vaccination.
h) Fly control methods include sprays, backrubbers, insecticidal ear tags, and dust bags. Feed through fly control is <u>not</u> recommended. Insecticides that kill fly larvae also kill beneficial insects such as dung beetles that are necessary for natural control and manure decomposition.
i) Continue to monitor body condition of first and second calf heifers. If they drop below 4.5, they should receive supplemental nutrition.
j) The breeding season should last no more than 60 days. Make plans for keeping bull separate before and after the 60 day breeding season.

12. PROFIT OPTIMIZATION AND EVALUATION PROGRAMS

a. Cornell Feedlot and Carcass Value Discovery Program

Purpose: Teach cow/calf producers the value of their calves based on performance in the feedlot and on through the packing plant. Calves are accepted in November and fed till their most optimal profit potential during March-July. For more information contact Mike Baker, Cornell Beef Specialist mjb28@cornell.edu, 607-255-5923.

b. Empire Heifer Development Program

Purpose: A management and marketing program for cow/calf producers to evaluate replacement heifer prospects and offer a marketing opportunity for quality heifers. Calves are accepted in December. Heifers can be bred artificially at the heifer rearing facility, or returned home for breeding. Eligible heifers can be sold as open heifers in April or bred heifers in October. For more information, contact Mike Baker, Cornell Beef Specialist mjb28@cornell.edu, 607-255-5923.

c. NY Beef Producers Central Bull Test and Sale

Purpose: To 1) compare individual performance of potential herd sires, 2) provide an opportunity for seedstock producers to market individual bulls, 3) provide a source of bulls for commercial and seedstock herds and 4) provide an educational opportunity for sellers and buyers alike. Bulls are accepted in November. Eligible bulls are sold in April. For more information contact Bull Test Managers Jason TenEyck at 315-539-8031 or Jim Brown at 315-549-8318.